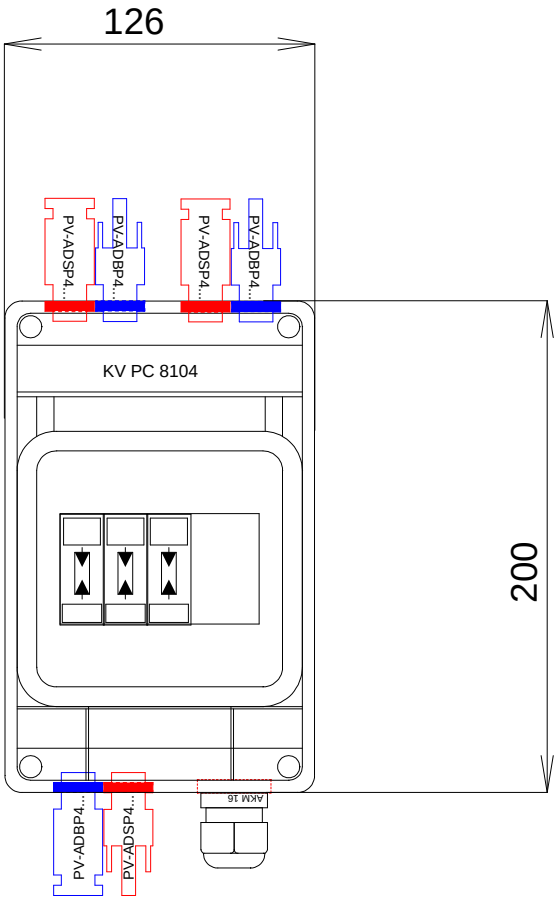

				origin		replaces replaced by		
				date	20.05.2014	Hensel Hungária Villamossági Kft. Hensel Campona u. 1 1225 Budapest 06-1/278-1080	system KV	scale 1:5
				creat.	Hensel		projectnummer PT20140514	
				check			position KV PV 1221	sheetnr.: 1 of: 1
stat.	redlinig	date	name	stand.				